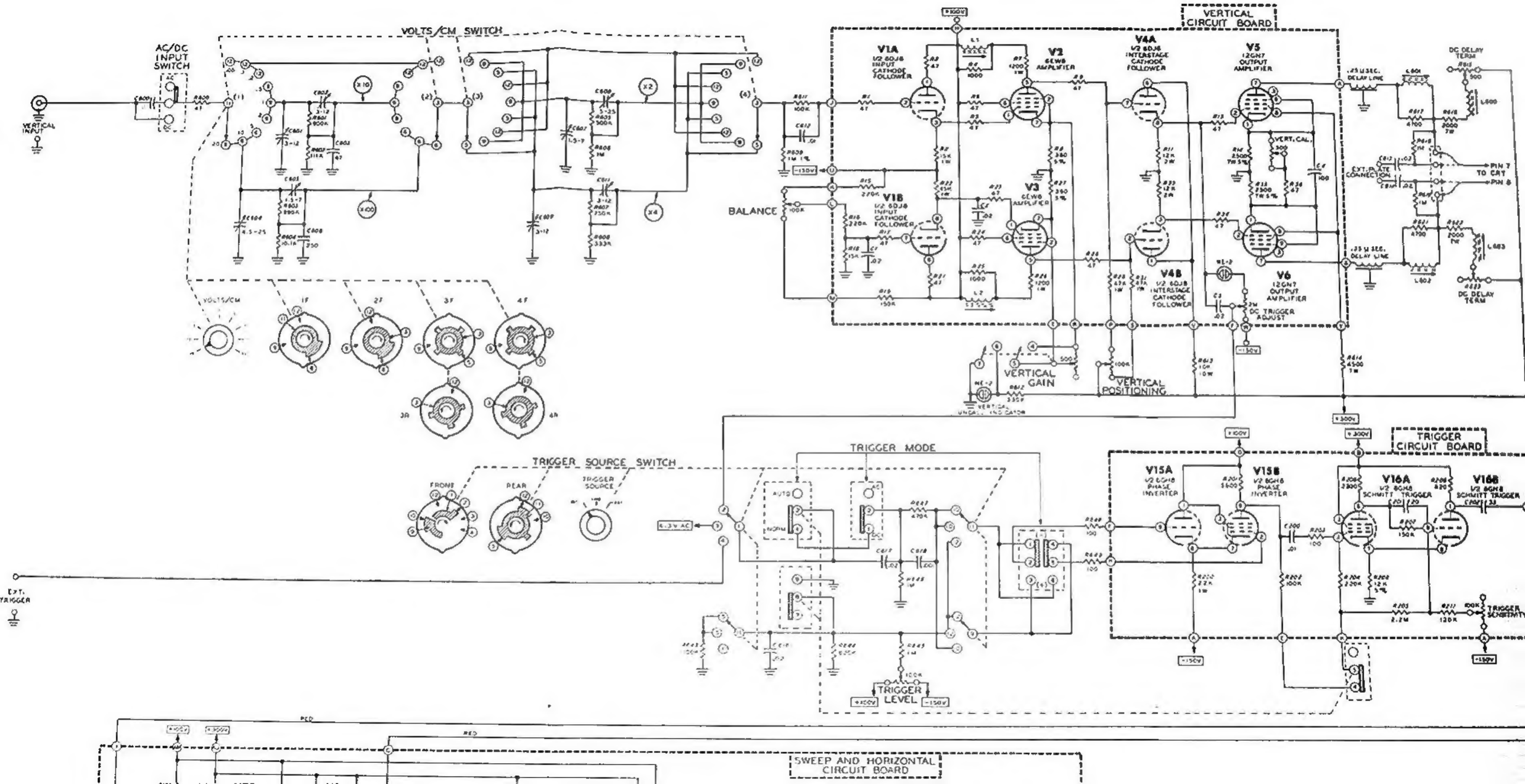
VERTICAL INPUT
AC/DC INPUT SWITCH
VOLTS/CM SWITCH
VERTICAL CIRCUIT BOARD
V1A 1/2 6DJ8 INPUT CATHODE FOLLOWER
V2 6EW6 AMPLIFIER
V4A 1/2 6DJ8 INTERSTAGE CATHODE FOLLOWER
V5 12GN7 OUTPUT AMPLIFIER
V1B 1/2 6DJ8 INPUT CATHODE FOLLOWER
V3 6EW6 AMPLIFIER
V4B 1/2 6DJ8 INTERSTAGE CATHODE FOLLOWER
V6 12GN7 OUTPUT AMPLIFIER
BALANCE
DC TRIGGER ADJUST
VERTICAL GAIN
VERTICAL POSITIONING
DC DELAY TERM
PIN 7 TO CRT
PIN 8
TRIGGER SOURCE SWITCH
FRONT
REAR
TRIGGER SOURCE
TRIGGER MODE
AUTO
NORM
TRIGGER LEVEL
TRIGGER CIRCUIT BOARD
V15A 1/2 6CG8 PHASE INVERTER
V15B 1/2 6CG8 PHASE INVERTER
V16A 1/2 6CG8 SCHMITT TRIGGER
V16B 1/2 6CG8 SCHMITT TRIGGER
EXT. TRIGGER
SWEEP AND HORIZONTAL CIRCUIT BOARD

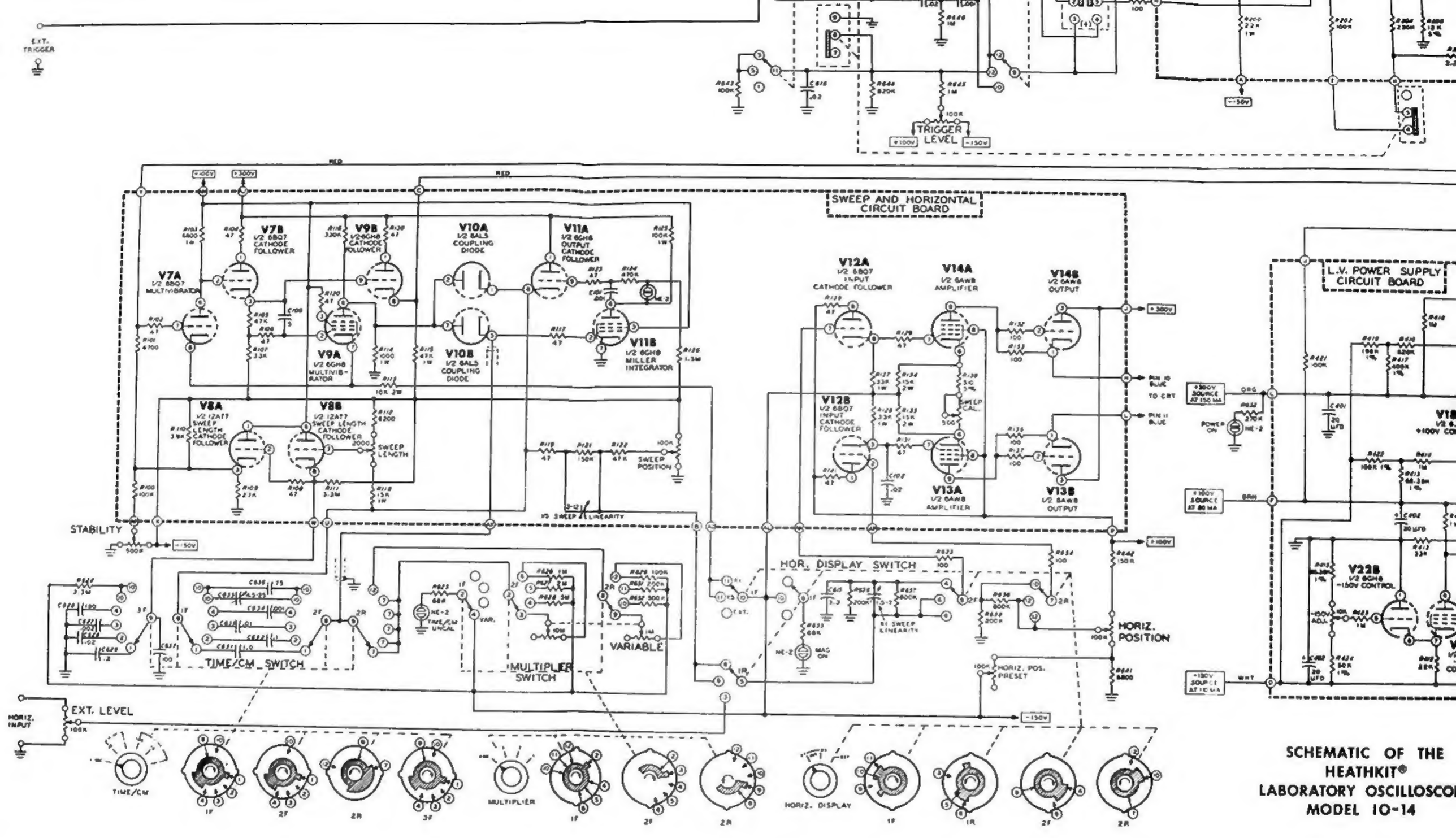

SCHEMATIC OF THE HEATHKIT® LABORATORY OSCILLOSCOPE MODEL 10-14

597-343
3/19/66

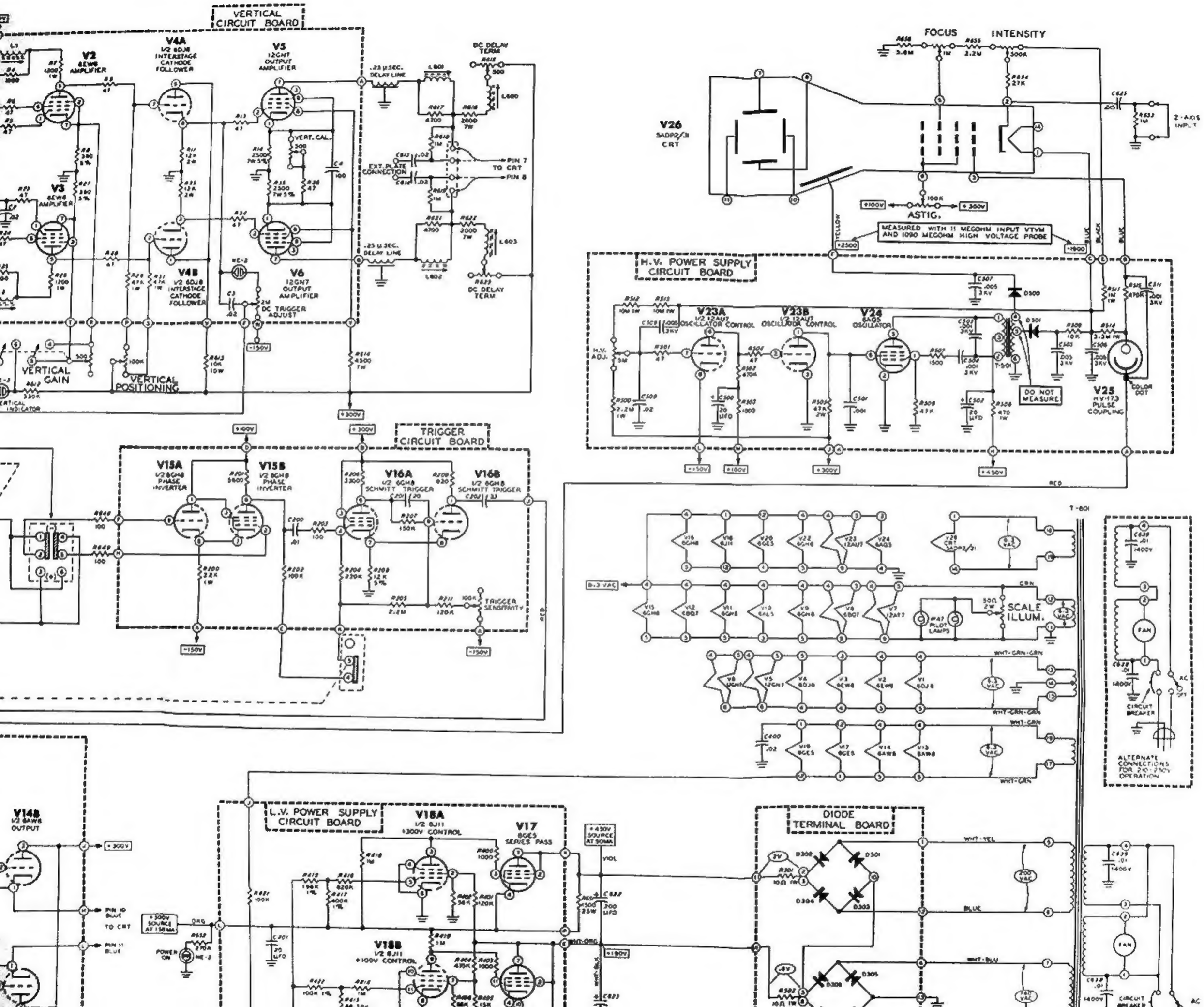
VERTICAL CIRCUIT BOARD
V2 6EW6 AMPLIFIER
V4A 1/2 6DJ8 INTERSTAGE CATHODE FOLLOWER
V5 12GN7 OUTPUT AMPLIFIER
V3 6EW6 AMPLIFIER
V4B 1/2 6DJ8 INTERSTAGE CATHODE FOLLOWER
V6 12GN7 OUTPUT AMPLIFIER
.25 μSEC. DELAY LINE
DC DELAY TERM
VERT. CAL.
EXT. PLATE CONNECTION
PIN 7 TO CRT
PIN 8
DC TRIGGER ADJUST
VERTICAL GAIN
VERTICAL POSITIONING
VERTICAL INDICATOR
TRIGGER CIRCUIT BOARD
V15A 1/2 6GH8 PHASE INVERTER
V15B 1/2 6GH8 PHASE INVERTER
V16A 1/2 6GH8 SCHMITT TRIGGER
V16B 1/2 6GH8 SCHMITT TRIGGER
TRIGGER SENSITIVITY
FOCUS
INTENSITY
V26 5ADP2/31 CRT
Z-AXIS INPUT
ASTIG.
MEASURED WITH 11 MEGOHM INPUT VTVM AND 1090 MEGOHM HIGH VOLTAGE PROBE
H.V. POWER SUPPLY CIRCUIT BOARD
V23A 1/2 12AU7 OSCILLATOR CONTROL
V23B 1/2 12AU7 OSCILLATOR CONTROL
V24 6AQ5 OSCILLATOR
H.V. ADJ.
DO NOT MEASURE
V25 HV-173 PULSE COUPLING
COLOR DOT
SCALE ILLUM.
PILOT LAMPS
CIRCUIT BREAKER
ALTERNATE CONNECTIONS FOR 240-250V OPERATION
V14B 1/2 6AW8 OUTPUT
PIN 10 BLUE TO CRT
PIN 11 BLUE
+300V SOURCE AT 150 MA
POWER ON
L.V. POWER SUPPLY CIRCUIT BOARD
V18A 1/2 6J11 +300V CONTROL
V17 6GE5 SERIES PASS
V18B 1/2 6J11 +100V CONTROL
+450V SOURCE AT 50MA
DIODE TERMINAL BOARD
200 VAC
147 VAC

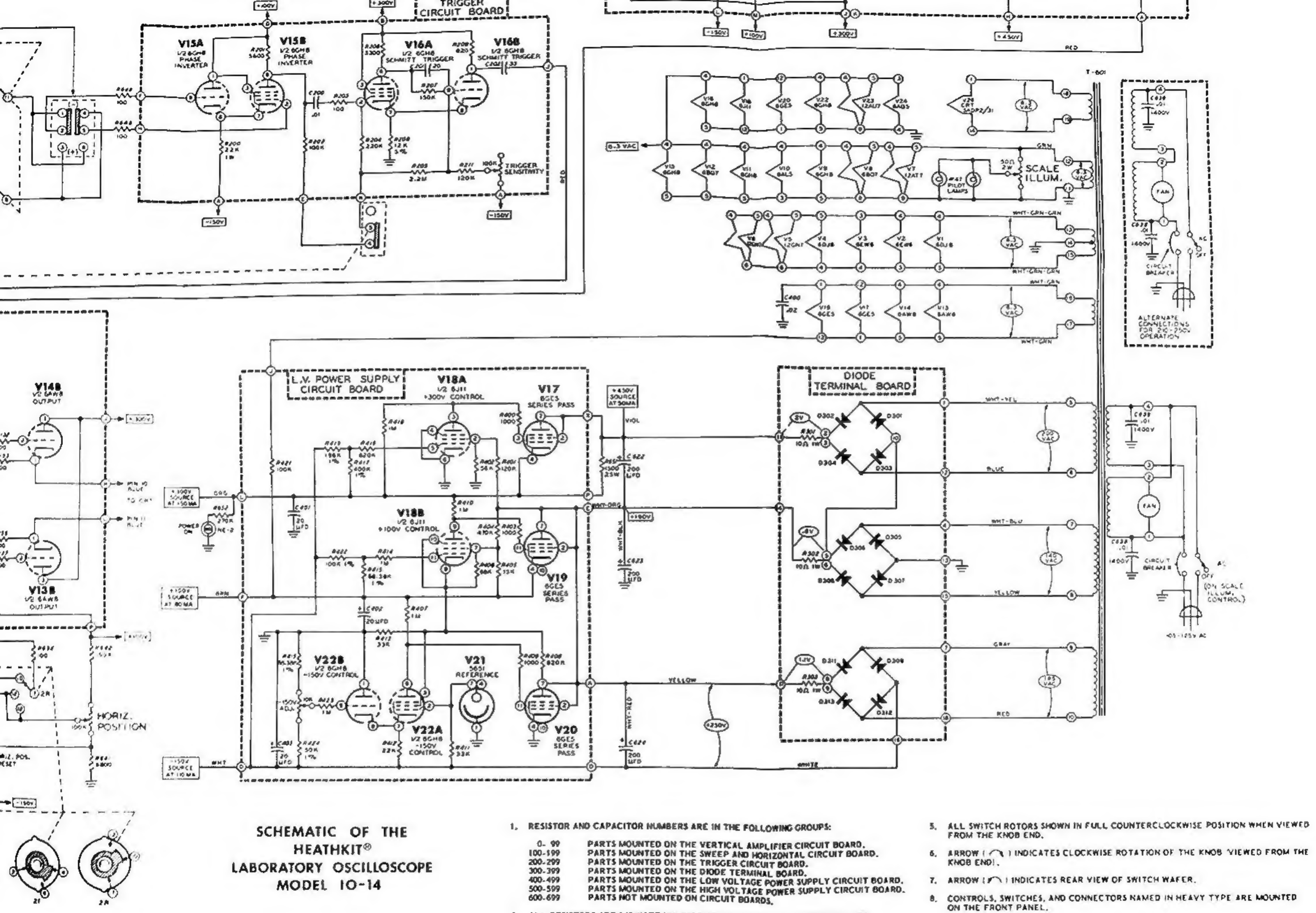

SCHEMATIC OF THE HEATHKIT® LABORATORY OSCILLOSCOPE MODEL IO-14

1. RESISTOR AND CAPACITOR NUMBERS ARE IN THE FOLLOWING GROUPS:

0- 99	PARTS MOUNTED ON THE VERTICAL AMPLIFIER CIRCUIT BOARD.
100-199	PARTS MOUNTED ON THE SWEEP AND HORIZONTAL CIRCUIT BOARD.
200-299	PARTS MOUNTED ON THE TRIGGER CIRCUIT BOARD.
300-399	PARTS MOUNTED ON THE DIODE TERMINAL BOARD.
400-499	PARTS MOUNTED ON THE LOW VOLTAGE POWER SUPPLY CIRCUIT BOARD.
500-599	PARTS MOUNTED ON THE HIGH VOLTAGE POWER SUPPLY CIRCUIT BOARD.
600-699	PARTS NOT MOUNTED ON CIRCUIT BOARDS.

2. ALL RESISTORS ARE 1/2 WATT UNLESS MARKED OTHERWISE. RESISTOR VALUES ARE IN OHMS (K = 100, MEG = 1,000,000).
3. ALL RESISTORS MOUNTED ON VOLT/CM SWITCH ARE 1% PRECISION RESISTORS.
4. CAPACITOR VALUES LESS THAN 1 ARE IN µfd. VALUES OF 1 AND ABOVE ARE IN µµf, UNLESS THEY ARE MARKED OTHERWISE.
5. ALL SWITCH ROTORS SHOWN IN FULL COUNTERCLOCKWISE POSITION WHEN VIEWED FROM THE KNOB END.
6. ARROW ( ) INDICATES CLOCKWISE ROTATION OF THE KNOB (VIEWED FROM THE KNOB END).
7. ARROW ( ) INDICATES REAR VIEW OF SWITCH WAFER.
8. CONTROLS, SWITCHES, AND CONNECTORS NAMED IN HEAVY TYPE ARE MOUNTED ON THE FRONT PANEL.
9. REFER TO THE CHASSIS PHOTOGRAPHS AND CIRCUIT BOARD X-RAY VIEWS (FOLD-OUT FROM PAGE 134) FOR THE PHYSICAL LOCATION OF PARTS.
10. ( ) ALL VOLTAGES MEASURED FROM THE POINT SHOWN TO CHASSIS GROUND.
11. ( ) ALL VOLTAGES MEASURED BETWEEN THE POINTS SHOWN.